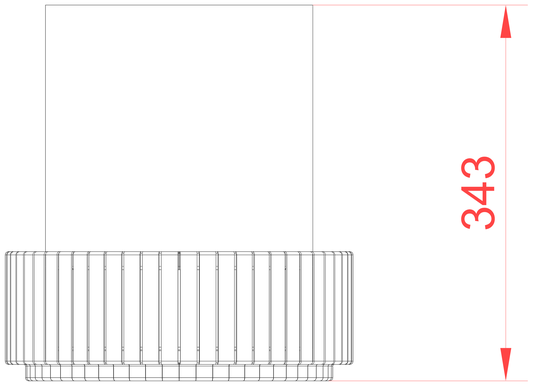

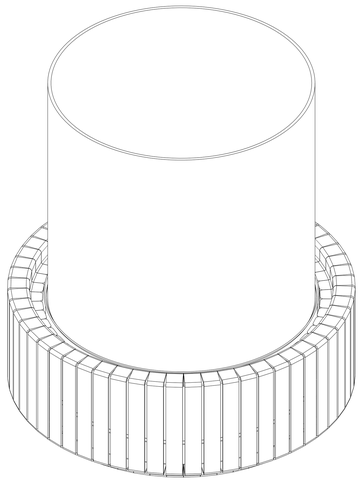

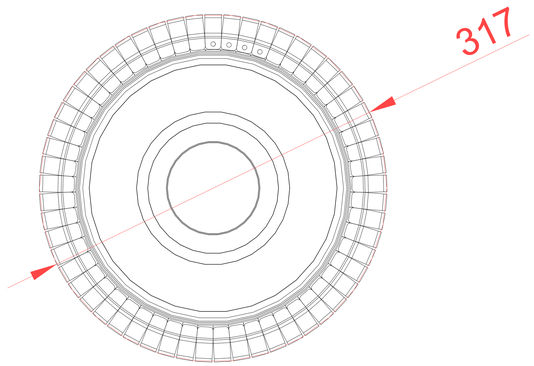

planika
INTELLIGENT FIRE

BOK	Lotus	